DONGOU MICRO-FILTRATION

DONGOU MICRO-FILTRATION

Advanced Microfiltration Since 1986

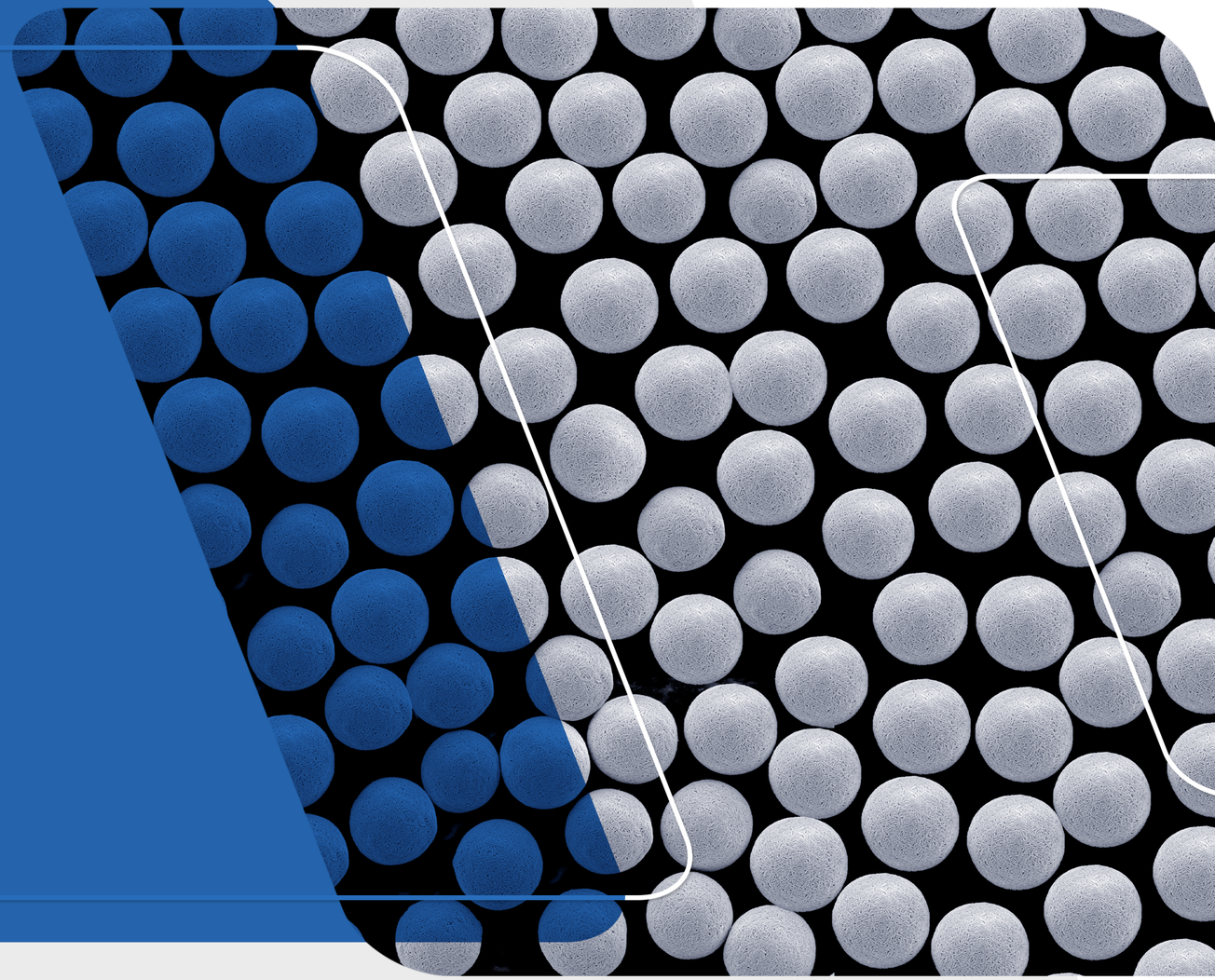

Zhejiang Dongou Filter Manufacturing Co., Ltd.

Operation Center:
Room 1405, Binrun Building, Binjiang Street, Lucheng District, Wenzhou, Zhejiang Province, China
Phone:
+86 577 88131573
Mail:
info@dongoufilter.com
Web:
www.Chinadongou.com | www.dongoufilter.com

Plants:
No.85-2, Shiniu Road, Shuige Industrial Park, Lishui City, Zhejiang Province, China
No.128 Qibaiyang Street, Liandu District, Lishui City, Zhejiang Province, China

Follow us on

Social Media

Powering Battery Excellence Through Filtration

Filtration.Washing.Concentration

Dongou Microfiltration

Fine chemicals

Agrochemical

Metallurgy and Mining

Applications:

New Energy Battery

Pharmaceutical

Food & Beverage

Industrial Wastewater Treatment

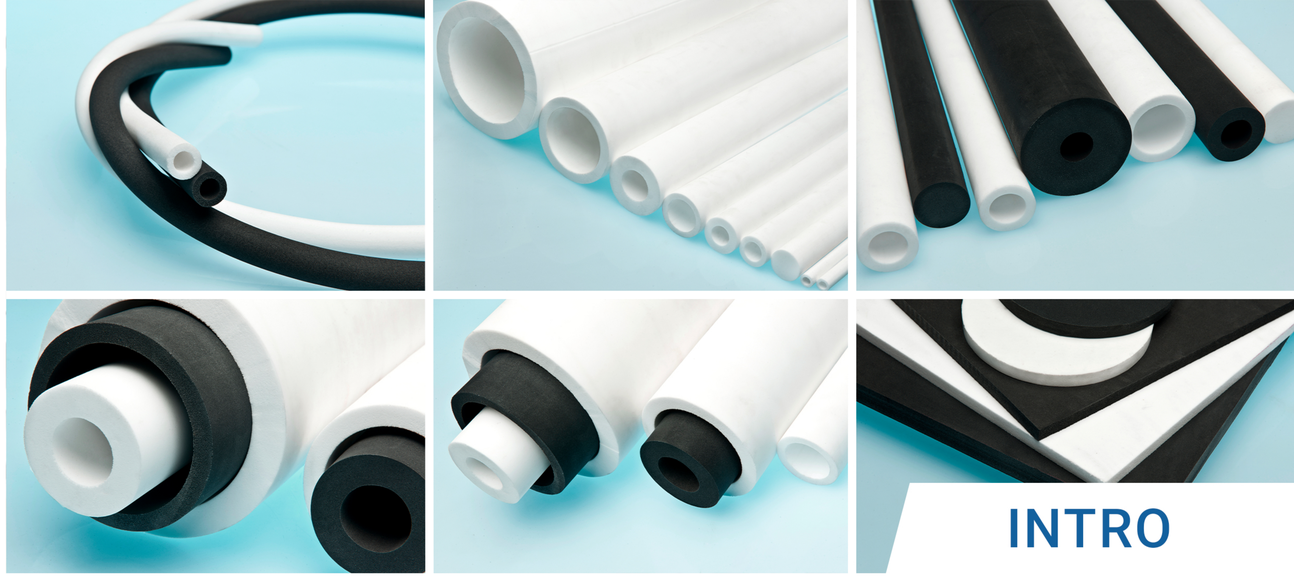

Sustainable Filtration Solutions for Battery Materials & Recycling

For decades, Dongou filtration elements have demonstrated exceptional efficiency and reliability in solid-liquid separation across nearly all industrial sectors. Since pioneering battery material filtration solutions in 2013, our technology has become integral to the energy storage supply chain, delivering proven performance enhancements from raw material extraction and electrode manufacturing through to recycling processes—providing integrated filtration, washing, and concentration in a compact, short-range process design.

Highly efficient filtration proves critical throughout battery production cycles, particularly when processing active materials. Where filtration systems interface with manufacturing processes, essential requirements include precision separation, controlled particle morphology and maximized production throughput with near-zero material waste. Dongou's microporous filtration technology meets these demands through advanced polymer engineering, delivering reliable micron particle separation via sintered surface-layer filtration mechanisms to ensure optimal process stability and output quality.

Why Choose Dongou Filter?

- Temperature resistance up to 180°C
- Chemical-proof (acids/alkalies/salts)
- Multi-cycle regenerable: Backflush & Chemical Recovery
- Safety compliance (non-toxic/PFAS-free)
- High-throughput separation

SYSTEMS

Portfolio

The Right Filtration Unit for Battery Value Chain

Engineered for battery manufacturing excellence, Dongou's filtration systems offer versatile configurations to address diverse battery production challenges. With customizable designs and specialized lining materials, our solutions precisely adapt to each application's unique demands - delivering reliable performance from raw material treatment to final concentrate processing.

Concentration Filter

PGNX

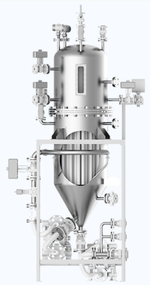

PGN

PGFYNS

Clarification Filter

PGR Ⅰ

PGR Ⅱ

Filter-Press Washer

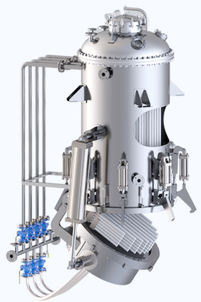

PGH

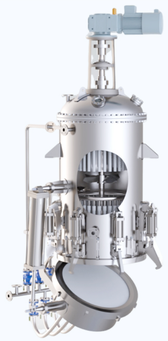

PGPX

Benefits

- Sealed System - Cleaner Production Environment
- Smart PLC - Fully Automated and Easy to Operate
- Corrosion-resistant Shell Lining - Full Material Compatibility in Battery Production
- Sustainably Efficient: Continuous Filtration, Optimized Energy Use

Concentration Filter | PGNX/PGN

PGN | Without Agitator

PGNX | With Agitator

Designed for ternary precursor production in new-energy batteries, it works with precursor synthesis reactors to increase reaction concentration, improve PSD uniformity and optimize particle morphology.

- Offers multiple material lining options for parts in contact with the slurry.
- No Contamination: Magnetic-impurity-free filtration
- Fully automated operation, including grouped backflush, continuous cycling, and multi-point control, enabling continuous operation.

key advantages for sustainable precursor manufacturing

- improved particle integrity
- more efficient co-precipitation
- reduced nickel/cobalt loss

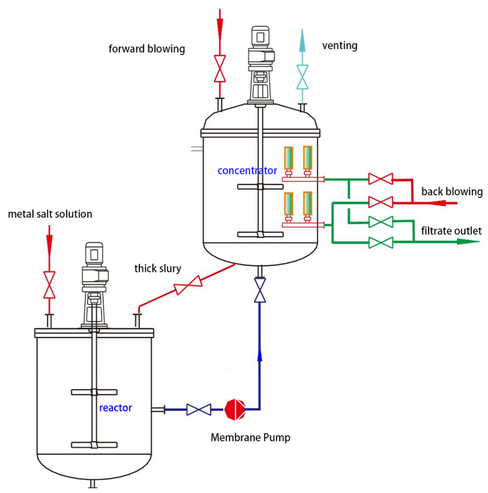

Concentration Filter | PGFYNS

1

All-in-one system (reactor + dosing + thickening): Integrates reactor & filter unit into one compact system
- Cost-Efficient: Reduces equipment investment by eliminating separate components
- 30% Smaller footprint vs traditional setups
- Smart Automation: Enables fully synchronized production control

Better Product Quality: Narrower particle distribution, improved morphology

Material Flexibility: Custom linings for different slurry types

No Contamination: Magnetic-impurity-free filtration

Optimized for ternary precursor co-precipitation - boosting concentration, purity, and yield in one integrated system.

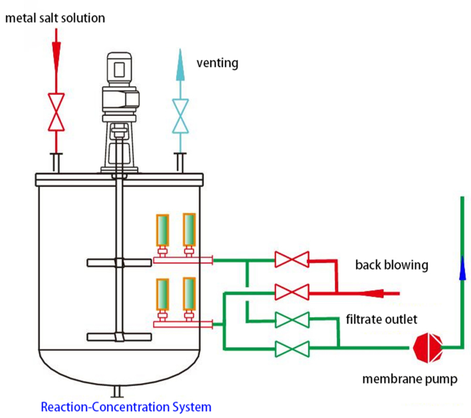

Clarification Filter | PGR Ⅰ

2

One system, multiple applications: Adaptable filtration for multiple process stages

Mother liquor purification
Effective removal of impurities from process streams

Chemical Dosing & Clarification
Pre-treatment of supernatant after chemical precipitation

Leachate refinement: High-efficiency clarification of extraction solutions

Crystallization feed preparation
Particulate control for optimal crystal growth

Membrane pre-treatment
SDI reduction for NF/RO systems

Evaporator protection
Pre-concentration treatment for evaporator feed

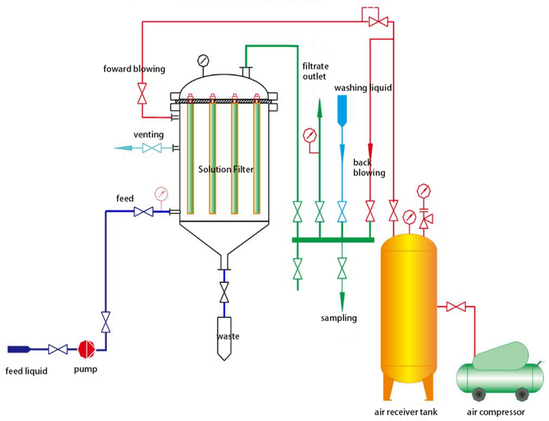

Clarification Filter | PGR Ⅱ

2

The tool-free opening system replaces the traditional compressed air backflush mechanism for filter regeneration, streamlining system architecture and lowering maintenance demands.

- Modified upper chamber with optimized openings
- Increased filtrate reservoir capacity
- Optimized control valve configuration
- Achieved overall cost reduction

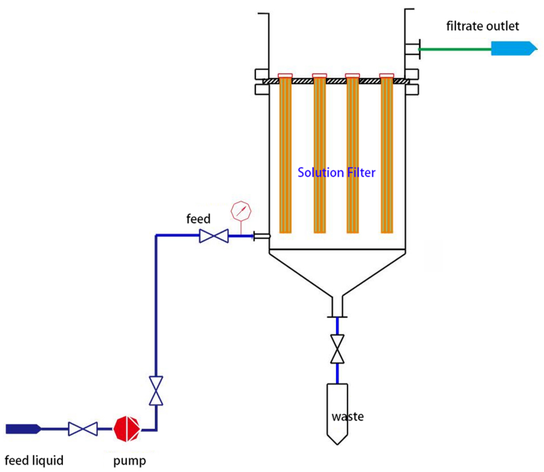

Filter-Press Washer | PGH & PGPX

3

Designed for high solid-content slurries in combined filtration/washing operations where low cake dryness is acceptable

Fully Automated Operation
- Sealed filtration system, ensures clean production environment
- Positive pressure dewatering & Automatic cover-opening residue discharge, reduces manual intervention while maintaining operational safety
- Multi-unit synchronization, enables continuous production with optimized workflow efficiency

Proven Applications in
- Activated carbon decolorization filtration & washing
- Crystalline solution filtration & washing
- Ultra-fine powder filtration & washing

PGH

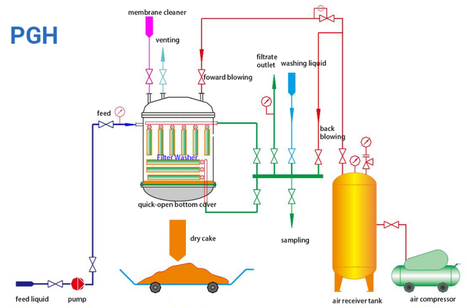

PGPX

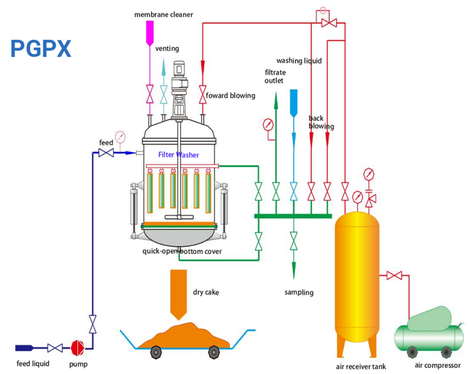

PGH

PGPX

From Lab to Industrial Standard: How Dongou's Concentrator Empowered EV Battery Manufacturing

Problem

In 2013, a Chinese tungsten industry leader (Shanghai-listed, SHA:600549) faced dual challenges in ternary precursor production:

- Primitive sedimentation equipment constrained both product quality (irregular particle morphology/size distribution) and production capacity
- Existing technology couldn't meet growing demands for high-performance lithium-ion battery materials

Dongou Solution

Developed the pioneering Automated Filtration-Concentrator featuring:

- Self-regenerating filter array with grouped backflush - ensures continuous production
- Integrated PLC control (pressure-flow-stirring interlock)
- Pioneering field test - deployed first industrial prototype pro bono
- Patent-protected innovation

Outcomes

Fully automated operation with self-cleaning capability ensures higher process availability and filtration efficiency

- 20% ↑ production throughput
- 15% tighter particle distribution (D90 data)
- Optimized morphology uniformity meeting NCM811 standards

Industry-Wide Adoption

- Adopted by 98% of China's precursor producers
- Implemented in 5+ countries' battery supply chains
- Enabled industry-wide 20%+ efficiency gains

Filtration.Washing.Concentration

Dongou's filtration technology

Servicing 90%+ battery microfiltration needs – request complimentary material analysis for your process.

For further details or a technical consultation, do not hesitate to contact us at info@dongoufilter.com

DONGOU MICRO-FILTRATION